61161（27.5KV/3150A-31.5KA）型真空开关管外形图

61161（27.5KV/3150A-31.5KA）Vacuum Interrupter Drawing

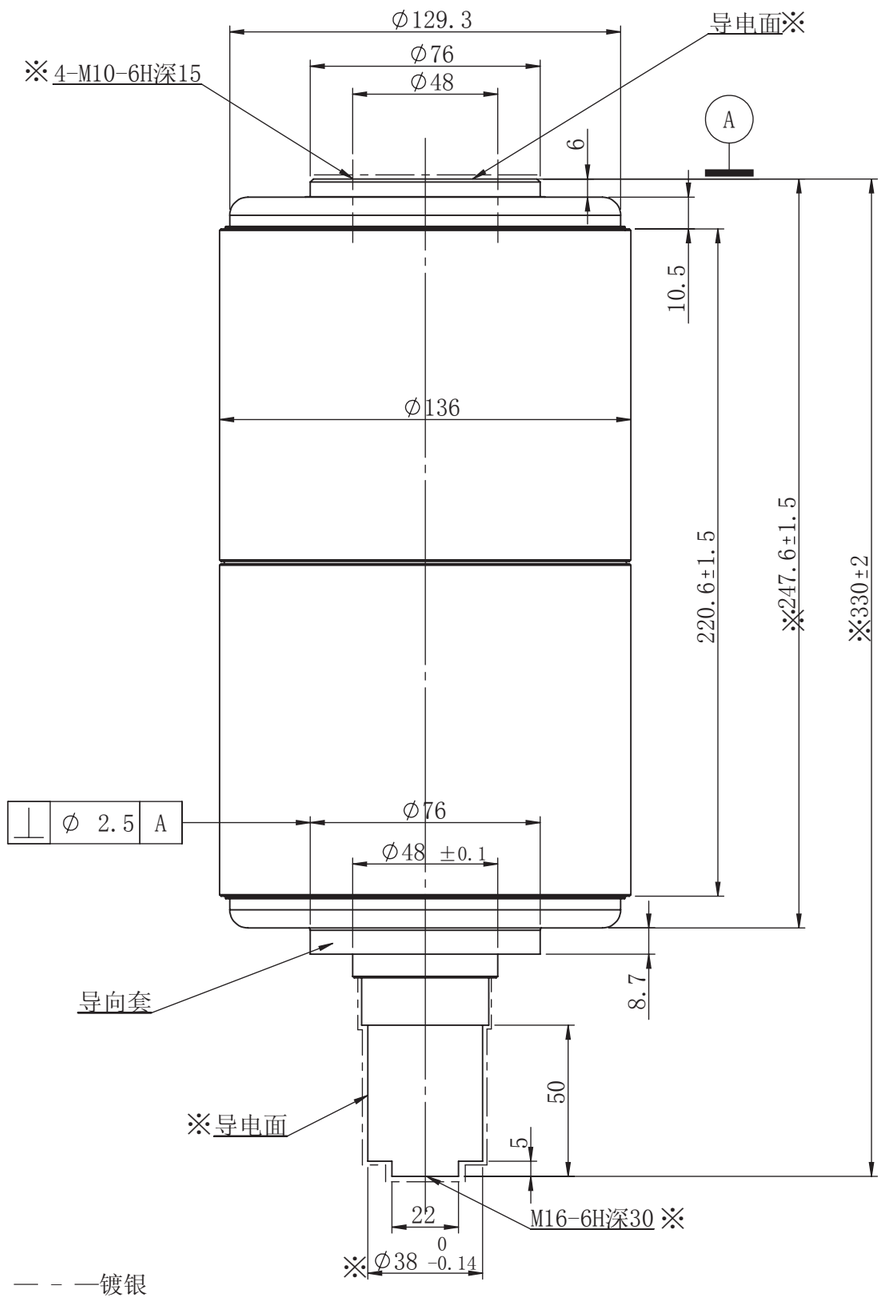

61161（27.5KV/3150A-31.5KA）型真空开关管技术参数

61161（27.5KV/3150A-31.5KA）Vacuum Interrupter Technical Specifications

主要技术参数（断路器用）MAIN TECHNICA DATA（FOR CIRCUIT BREAKER）	
额定电压 Rated voltage	27.5KV
额定电流 Rated current	3150A
额定频率 Rated frequency	50/60HZ
额定短路开断电流 Rated short-circuit breaking current	31.5KA
额定短路开断电流开断次数Operations of short-circuit breaking current interruption	30次
最大直流分量 Max.DC-component	40%
额定短路关合电流 Rated short-circuit making current	80KA
额定峰值耐受电流 Rated peak withstand current	80KA
额定短时耐受电流(4秒) Rated short-time withstand current(4s)	31.5KA
额定单个电容器组开断电流 Rated breaking current of single capacitor bank	#630A
额定背对背电容器开断电流 Rated breaking current of back to back capacitor bank	#400A
短时(1min)工频耐受电压 Short-time(1min) power-frequency withstand voltage	*95KV
雷电冲击耐受电压(峰值) Lightning impulse withstand voltage(peak)	*185KV/#200KV
额定触头压力下限时的回路电阻 Circuit resistance at minimum added force	≤25μΩ
机械寿命 Mechanical life	20000次
触头自闭力 Closing force due to bellows and atmosphere	200±60N
额定开距下的触头反力 Force required to hold contacts open at full stroke	300±60N
触头允许磨损厚度 Contact erosion limit	3mm
贮存期 Shelf life	20年
质量/动触头质量 Total mass of interrupter/Moving mass of interrupter	9.5Kg/3.36Kg
额定操作顺序 Rated operating sequence	O-0.3s-CO-180s-CO
配套真空开关的机械参数(建议值)MECHANICAL DATA OF CIRCUIT-BREAKING RECOMMENDATIONS WITH THE INTERRUPTERS	
触头开距 Rated contact stroke	19±1mm
触头接触行程 Contact connection stroke	6±2mm
平均分闸速度（0-8mm行程） Average opening speed（0-8mm stroke）	1.4-2.0m/s
平均合闸速度（8mm-触头闭合） Average closing speed（8mm-contact making）	0.8-1.2m/s
触头初压力 Added external contact force at contact touch point	≥2100N
额定触头压力 Added force on closed contacts	3100^{+1400}_{-200}N
触头合闸弹跳时间 Max.bouncing duration	≤5ms
触头分合闸不同期 Out of simultaneity of contact closing and opening	≤2ms
分闸触头反弹幅值 Max. rebound distance	≤2mm
分闸触头过冲幅值 Max. overtravel	≤2mm

备注（Note）：

订货时需与BOV公司协商(Must consult with BOV)；

* 须有外绝缘保护（With insulation cover）；